Tent China 10’ x 10’

TEMPLATE VERSION 1.0 - SCALE AT 50%

SAFE AREA

RIGHT AND LEFT PANEL

2X

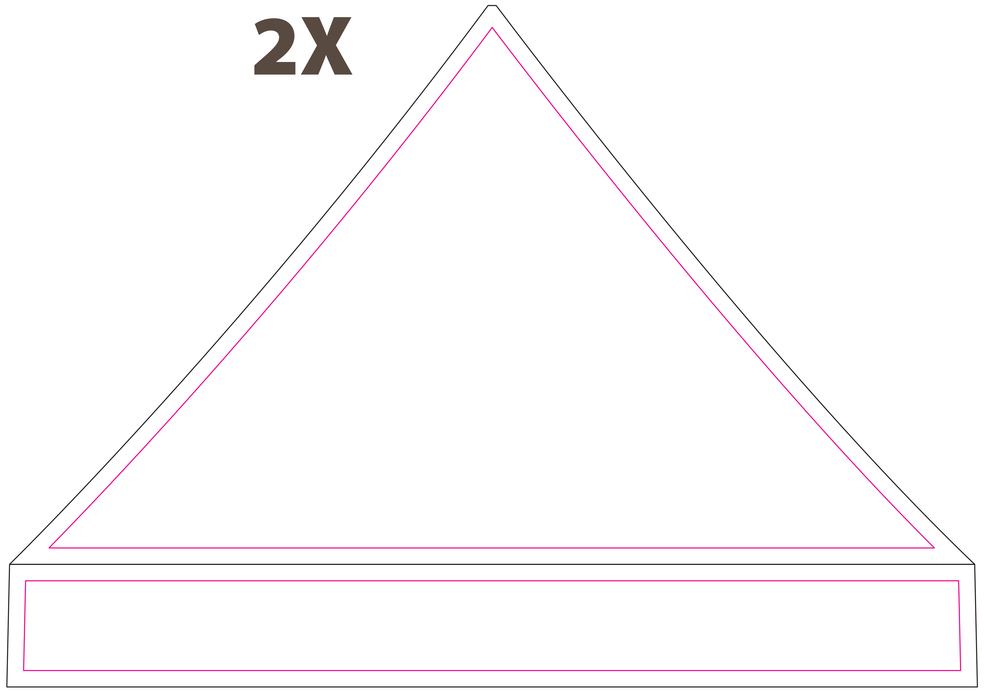

VALENCE - FRONT AND BACK

FRONT AND BACK

2X

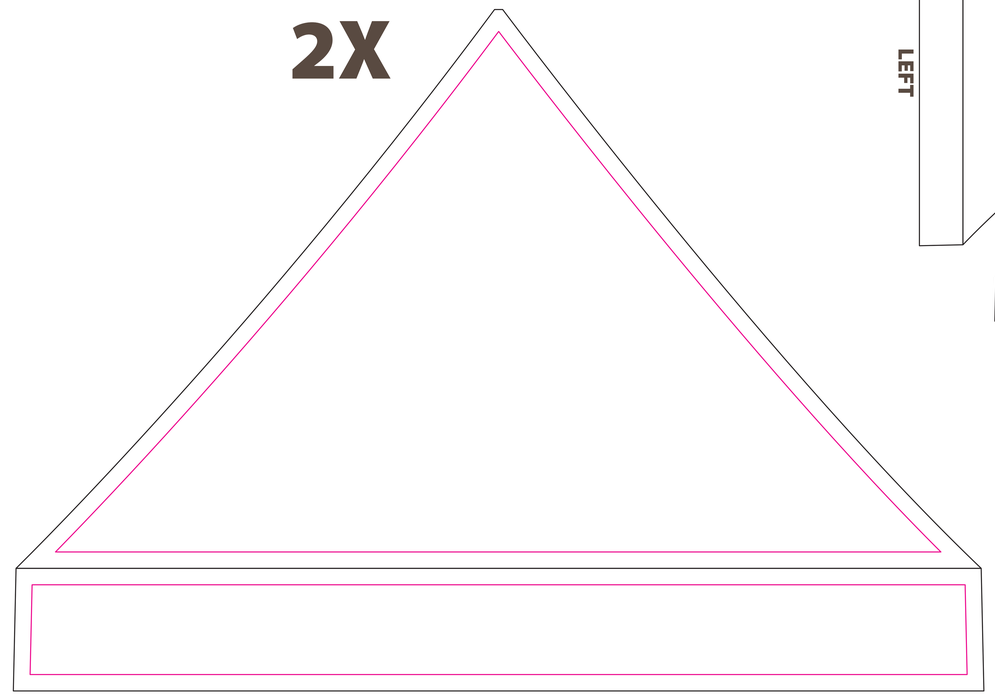

VALENCE - FRONT AND BACK

POSITIONING

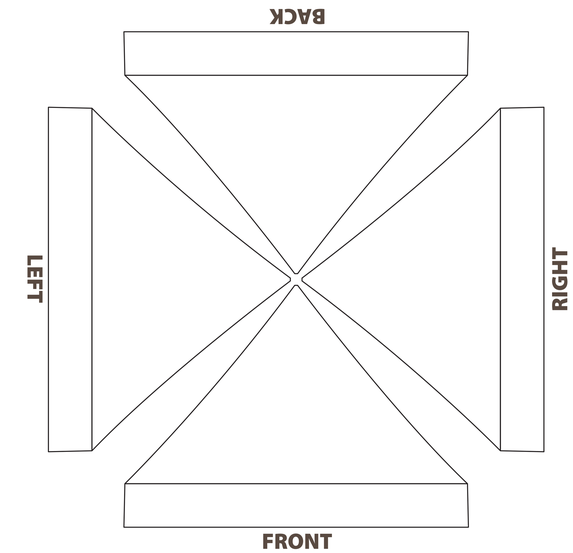

***POSSIBILITY OF MAKING A BACK WITH THE SAME TEMPLATE**

WALL

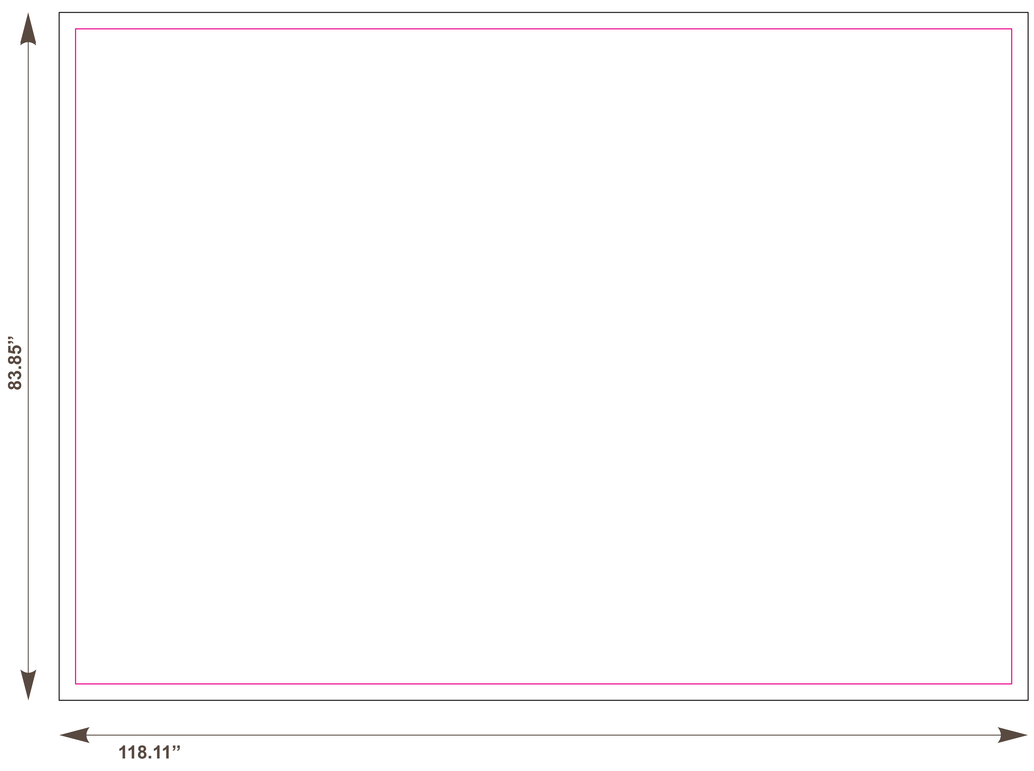
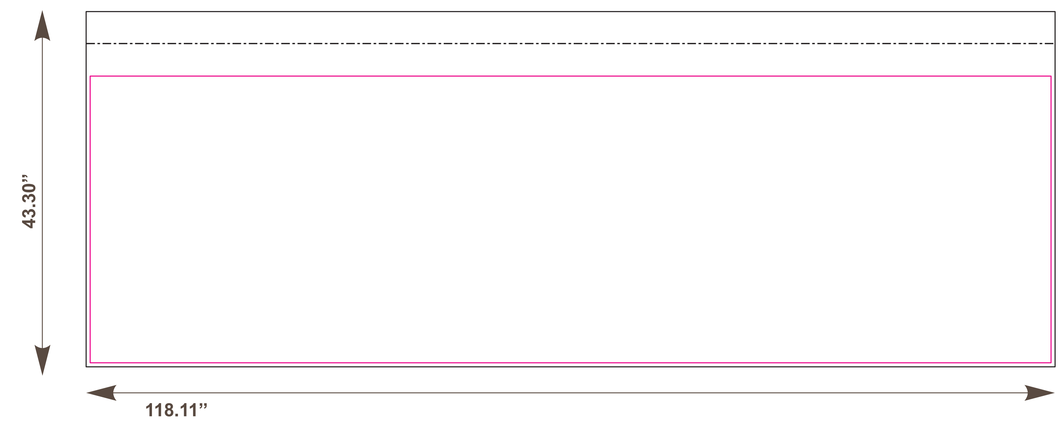
HALF WALL